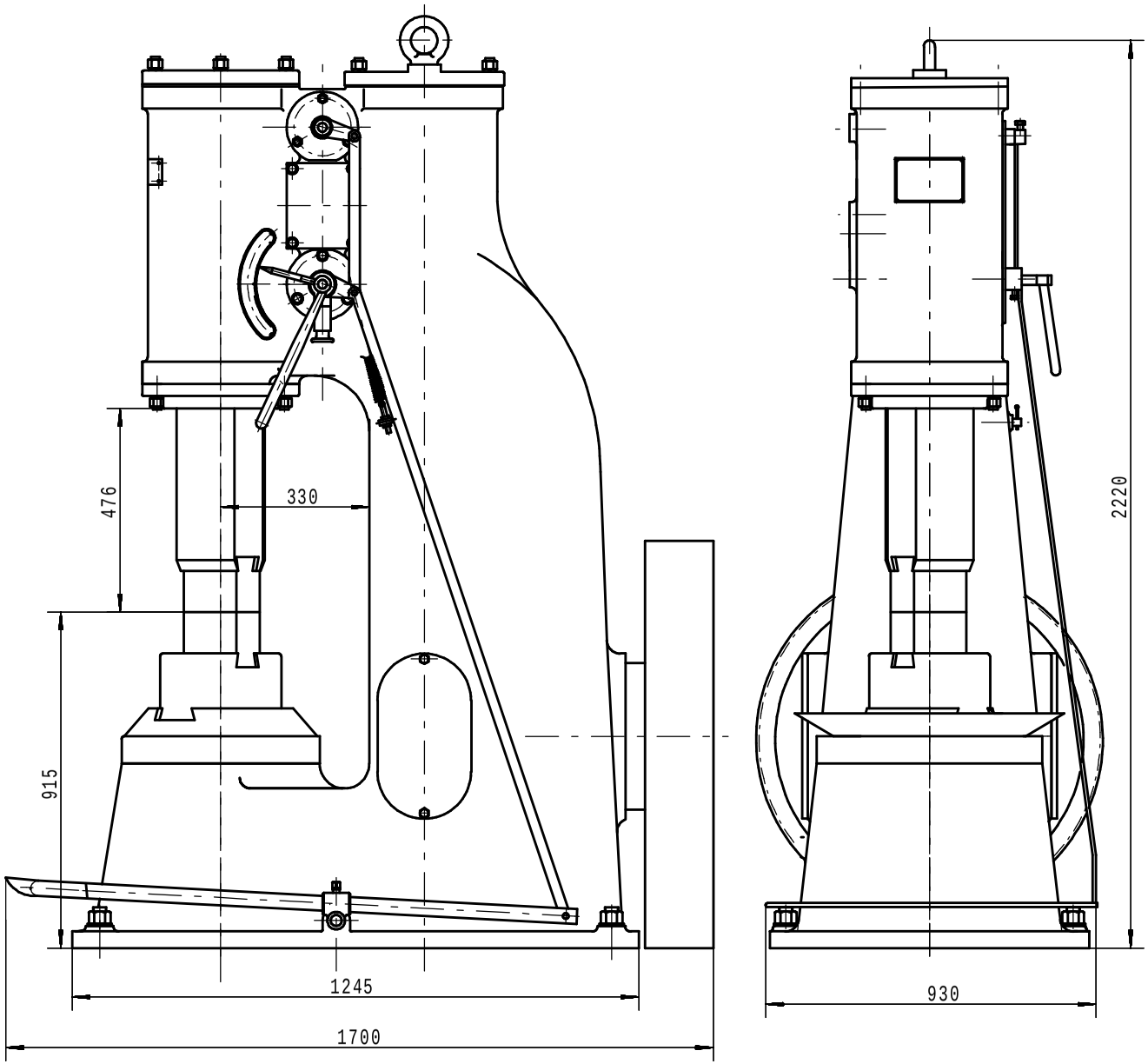

					Overall size	C41-75L